Inductive sensor
With switching distance
BI15-M30-AN6X 7M

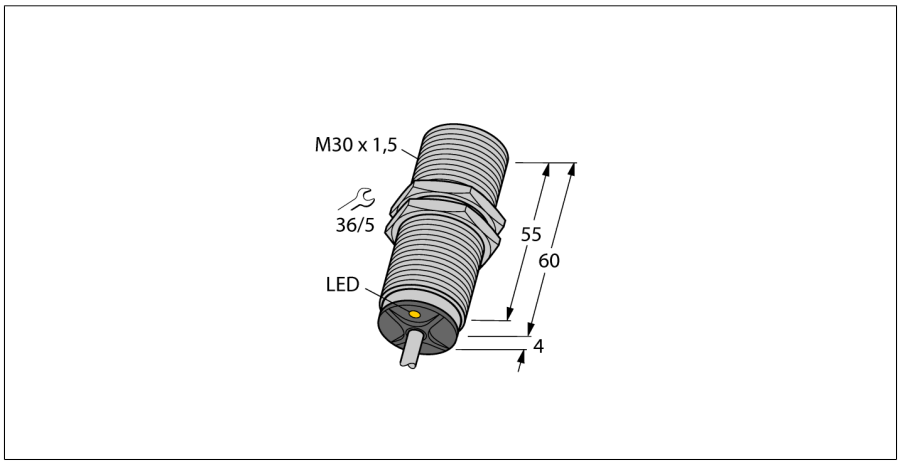

- **Threaded barrel, M30 x 1.5**
- **Chrome-plated brass**
- **Large coverage**
- **DC 3-wire, 10…30 VDC**
- **NO contact, NPN output**
- **Cable connection**

Wiring diagram

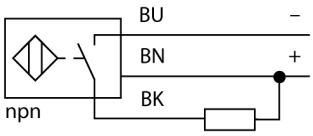

Type code	BI15-M30-AN6X 7M
Ident no.	4618621
Rated operating distance Sn	15 mm
Mounting condition	flush
Assured switching distance	≤ (0,81 x Sn) mm
Repeatability	≤ 2 % of full scale
Temperature drift	≤ ± 10 %
Hysteresis	3…15 %
Ambient temperature	-25…+70 °C
Operating voltage	10…30VDC
Residual ripple	≤ 10 % U_{ss}
DC rated operational current	≤ 200 mA
No-load current I_0	≤ 15 mA
Residual current	≤ 0.1 mA
Rated insulation voltage	≤ 0.5 kV
Short-circuit protection	yes/ cyclic
Voltage drop at I_e	≤ 1.8 V
Wire breakage / Reverse polarity protection	yes/ complete
Output function	3-wire, NO contact, NPN
Protective insulation	⧈
Switching frequency	0.3 kHz
Construction	threaded barrel, M30 x 1.5
Dimensions	64 mm
Housing material	metal, CuZn, chrome-plated
Material active area	plastic, PA
End cap	Plastic, EPTR
Max. tightening torque housing nut	75 Nm
Connection	cable
Cable quality	5.2 mm, LifYY, PVC, 7m
Cable cross section	3 x 0.34 mm^2
Vibration resistance	55 Hz (1 mm)
Shock resistance	30 g (11 ms)
IP Rating	IP67
MTTF	2283 years acc. to SN 29500 (Ed. 99) 40 °C
Switching state	LED yellow

Functional principle

Inductive sensors detect metal objects contactless and wear-free. For this, they use a high-frequency electromagnetic AC field that interacts with the target. Inductive sensors generate this field via an RLC circuit with a ferrite coil.

Edition • 2015-02-13T14:23:10+01:00

Hans Turck GmbH & Co.KG ● D-45472 Mülheim an der Ruhr ● Witzlebenstraße 7 ● Tel. 0208 4952-0 ● Fax 0208 4952-264 ● more@turck.com ● www.turck.com

Inductive sensor
With switching distance
BI15-M30-AN6X 7M

Distance D	2 x B
Distance W	3 x Sn
Distance T	3 x B
Distance S	1.5 x B
Distance G	6 x Sn

Diameter of the active area B	Ø 30 mm

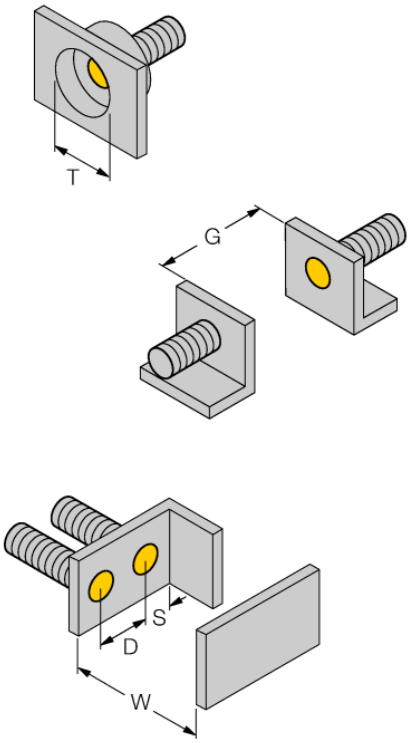

Edition • 2015-02-13T14:23:10+01:00

Hans Turck GmbH & Co.KG ● D-45472 Mülheim an der Ruhr ● Witzlebenstraße 7 ● Tel. 0208 4952-0 ● Fax 0208 4952-264 ● more@turck.com ● www.turck.com

Accessories

Type code	Ident no.	Description	Design
BST-30B	6947216	Fixing clamp for threaded barrel devices, with dead-stop; material: PA6	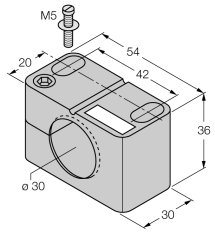
QM-30	6945103	Quick-mount bracket with dead-stop; material: Chrome-plated brass Male thread M36 x 1.5. Note: The switching distance of proximity switches can be reduced by the use of quick-mount brackets.	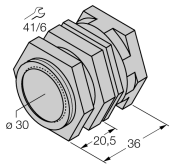
MW-30	6945005	Mounting bracket for threaded barrel devices; material: Stainless steel A2 1.4301 (AISI 304)	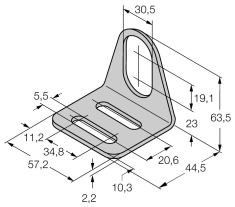
BSS-30	6901319	Mounting bracket for smooth and threaded barrel devices; material: Polypropylene	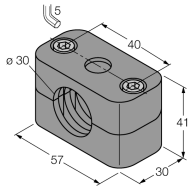

Edition • 2015-02-13T14:23:10+01:00