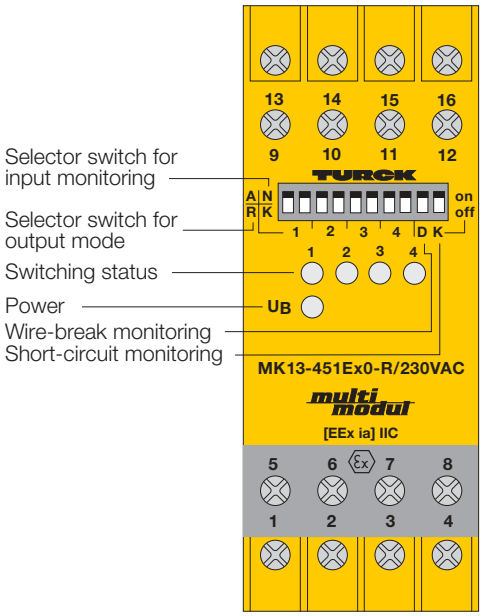

Isolating Switching Amplifier MK13-451Ex0-R/24VDC MK13-451Ex0-R/230VAC 4-channel

1

- **4-channel isolating switching amplifier with common alarm output**
- **Intrinsically safe input circuits EEx ia**
- **Area of application according to ATEX: II (1) G**
- **Galvanic isolation between input circuits, output circuits and supply voltage**
- **Input circuit monitoring for wire-break and short-circuit (can be disabled)**
- **5 relay outputs, each with one NO contact**
- **Selectable NO/NC output function**

The MK13-451Ex0-R type switching amplifiers are 4-channel devices featuring intrinsically safe input circuits. They can be connected to sensors according to EN 60947-5-6 (NAMUR), variable resistors or potential-free contacts. The output circuits each feature a relay with a NO contact. The device also avails of a common alarm output.

Ten front panel programming switches select the output function of each channel (switch positions A and R represent normally open mode (NO) and normally closed (NC) mode, respectively) and enable input circuit monitoring.

Switches D (wire-break) and K (short-circuit) determine which of their conditions should be monitored for all channels with activated input circuit monitoring (switch position N).
When using mechanical contacts as the input device, input circuit monitoring must be disabled (switch position K) or shunt resistors must be connected to the contacts (II). (See next page for contact configuration).

The green LED on the front cover indicates that the device is powered. The four dual colour LEDs indicate the switching status (yellow) as well as fault conditions (red). When the input circuit monitoring feature is activated, red illuminates to indicate a fault condition in the input circuit and the corresponding output relay and alarm output are de-energised.

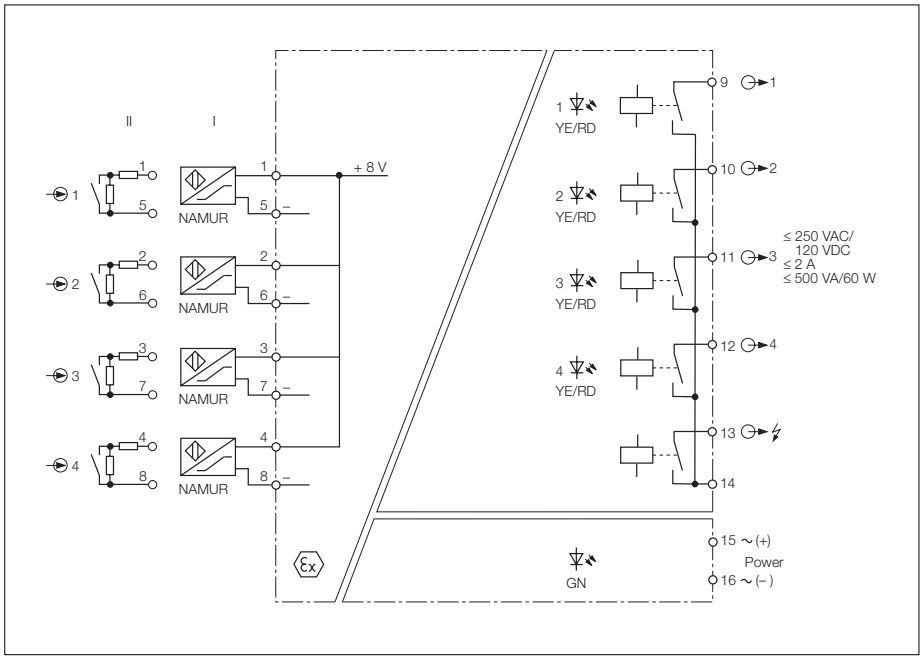

Isolating Switching Amplifier MK13-451Ex0-R

Type	MK13-451Ex0-R/230VAC	MK13-451Ex0-R/24VDC
Ident-no.	7411180	7541187
Supply voltage U_B	196...253 VAC	10...30 VDC
Line frequency/ripple W_{PP}	48...62 Hz	≤ 10 %
Power/current consumption	≤ 3 VA	≤ 2 W
Galvanic isolation	between input circuit, output circuit and supply voltage for 250 V_{rms}, test voltage 2.5 kV_{rms}	between input circuit, output circuit and supply voltage for 250 V_{rms}, test voltage 2.5 kV_{rms}
Input circuits	according to EN 60947-5-6 (NAMUR), intrinsically safe according to EN 50020	according to EN 60947-5-6 (NAMUR), intrinsically safe according to EN 50020
Operating characteristics		
– Voltage	8 V	8 V
– Current	8 mA	8 mA
Switching threshold	1.55 mA	1.55 mA
Hysteresis	typ. 0.2 mA	typ. 0.2 mA
Wire-break threshold	≤ 0.1 mA	≤ 0.1 mA
Short-circuit threshold	≥ 6.0 mA	≥ 6.0 mA
Contact configuration Of mechanical switches with active input circuit monitoring function	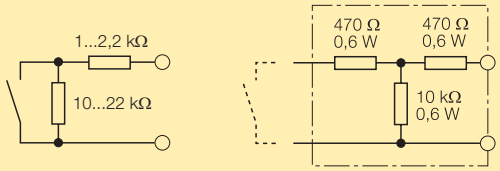 resistor module WM1, ident-no. 0912101	
Output circuits	5 relay outputs (NO)	5 relay outputs (NO)
Switching voltage	≤ 250 VAC/120 VDC	≤ 250 VAC/120 VDC
Switching current per output	≤ 2 A	≤ 2 A
Switching capacity per output	≤ 500 VA/60 W	≤ 500 VA/60 W
Switching frequency	≤ 10 Hz	≤ 10 Hz
Contact material	silver-alloy + 3 µm Au	silver-alloy + 3 µm Au
Ex-approval acc. to certificate of conformity	PTB 99 ATEX 2084	PTB 99 ATEX 2084
Maximum nominal values		
– No load voltage U_0	≤ 11.5 V	≤ 11.5 V
– Short-circuit current I_0	≤ 51.2 mA	≤ 51.2 mA
Max. external inductances/capacitances L_0/C_0		
– [EEx ia/ib] IIC	1.64 µF/14 mH	1.64 µF/14 mH
– [EEx ia/ib] IIB	11.2 µF/55 mH	11.2 µF/55 mH
Marking of devices	II (1) G [EEx ia] IIC	II (1) G [EEx ia] IIC
LED indications		
– Power	green	green
– Switching status/fault indication	4 x yellow/red (2-colour LED)	4 x yellow/red (2-colour LED)
Housing	16-pole, 36 mm wide, Polycarbonate/ABS, flammability class V-0 per UL 94	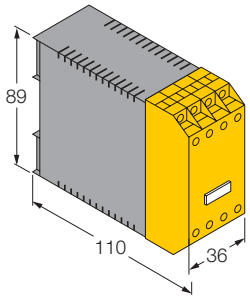
Mounting	snap-on clamps for top-hat rail (DIN 50022) or screw terminals for panel mounting	
Connection	via flat terminals with self-lifting pressure plates	
Connection profile	≤ 2 x 2.5 mm^2 or 2 x 1.5 mm^2 with wire sleeves	
Degree of protection (IEC 60529/EN 60529)	IP20	
Operating temperature	-25…+60 °C	